Patent Alert November 2026

Furniture Textiles

This month's selection in brief

This patent alert showcases eight recent developments illustrating key innovation trends in furniture textiles and upholstery. The selected inventions reflect how the sector is evolving toward more circular, functional, durable, comfortable, and safe textile solutions, while addressing growing demands for sustainability, material efficiency, product longevity, and enhanced performance in furniture and interior applications.

Centexbel supports companies throughout this innovation journey, from material selection and product development to testing and validation. Its expertise covers sustainable materials, functional coatings and finishing, textile performance, ecodesign, recycling and the development of circular solutions for coated, complex and multilayer textiles.

Contents

1. MULTI-LAYER COATING FOR STAIN PROTECTION AND STAIN RELEASE 2

2. ANTIMICROBIAL SYNTHETIC TEXTILE AND A METHOD FOR MANUFACTURING THEREOF 2

3. LAMINATE, INTERIOR MATERIAL INCLUDING SAME, VEHICLE COMPONENT, AND FURNITURE 4

4. FLEXIBLE ABRASIVE PRODUCT 5

5. COATING COMPOSITION, A COMPOSITION FOR COATING FURNITURE OR BUILDING INTERIOR, AND AN ARTICLE COMPRISING THE COATING COMPOSITION 6

6. WOVEN FABRIC AND FIBER PRODUCT 7

7. TEXTILE SUBSTRATE WITH STRUCTURALLY INTEGRATED, DESTRUCTIBLE THREADS TO FACILITATE MATERIAL SEPARATION 8

8. BREATHABLE MULTI-LAYER COMPOSITE 9

1. MULTI-LAYER COATING FOR STAIN PROTECTION AND STAIN RELEASE

Patent number: US20260084183A1

Publication date: 2026-03-26

Applicant(s): WE GROUP LLC [US]

Inventor(s): ENGLISH STEVEN WRIGHT [US]; HADFIELD CHARLES GREGORY [US]; JAMES HARRISON MARKUS [US]

Summary

Implementations of the present disclosure generally relate to coatings for textiles and other substrates. In one or more implementation, methods for forming a protective coating on a substrate are provided and include depositing a hydrophobic base coating on at least one of a first or second surface of the substrate to form a first coated substrate, where the hydrophobic base coating is free of fluorocarbon compounds. The method further includes drying the first coated substrate by air-drying in ambient conditions or by heating the first coated substrate and depositing a hydrophilic top coating onto the hydrophobic base coating.

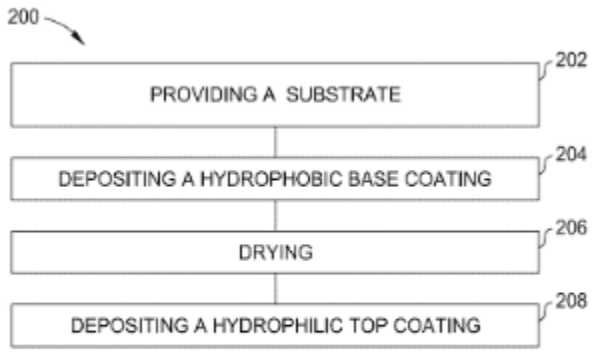

FIG. 2

2. ANTIMICROBIAL SYNTHETIC TEXTILE AND A METHOD FOR MANUFACTURING THEREOF

Patent number: WO2024115816A1

Publication date: 2024-06-06

Applicant(s): NORDIC BIOTECH GROUP OY [FI]

Inventor(s): KRIEL HAYDN [FI]; TIEAHO VILLE [FI]; BORANDEH SEDIGHEH [FI]; HOLOPAINEN KARI [FI]; SANDÅS STEFAN [FI]

Summary

The present disclosure relates to antimicrobial synthetic textiles and methods for manufacturing antimicrobial synthetic textiles. The present disclosure further concerns use of a polycarboxylic acid as an antimicrobial finish on a synthetic textile.

Table 2. Data for antibacterial activity value (A) calculation for *Staphylococcus aureus* (ATCC 6538). CA = citric acid; SHP = sodium hypophosphite; 0x = 0x washed; 10x = 10x washed; 25x = 25 x washed.

Value	0x CA+SHP	0x CA	10x CA+SHP	10x CA	25x CA+SHP	25x CA
C_0 (control)	4.5	4.5	4.5	4.5	4.5	4.5
C_t (control)	7.4	7.4	7.4	7.4	7.4	7.4
T_0 (sample)	4.5	4.5	4.5	4.5	4.5	4.5
T_t (sample)	<2.3	4.7	<2.3	6.3	<2.3	6.9
F	2.9	2.9	2.9	2.9	2.9	2.9
G	-2.2	0.2	-2.2	1.8	-2.2	2.4
A	>5.1	2.7	>5.1	1.1	>5.1	0.5
A %	>99.999	99.8	>99.999	92.7	99.999	68

3. LAMINATE, INTERIOR MATERIAL INCLUDING SAME, VEHICLE COMPONENT, AND FURNITURE

Patent number: WO2026048590A1

Publication date: 2026-03-05

Applicant(s): TORAY INDUSTRIES [JP]

Inventor(s): HAYASHI ERI [JP]; KOIDE GEN [JP]

Summary

The present invention addresses the problem of providing a laminate with which it is possible to maintain color development and friction fastness in a surface layer even after high-temperature press molding, and with which it is possible to achieve sufficient peel strength. A laminate according to the present invention comprises a surface layer containing artificial leather and a backing layer laminated together via an adhesive resin, wherein: the artificial leather includes a fiber structure and a polycarbonate-based polyurethane; the fiber structure includes ultrafine fibers composed of a polyester-based resin containing a black pigment and/or a chromatic pigment; the polycarbonate-based polyurethane has a skeleton represented by general formula (1) and a skeleton represented by general formula (2), or has a skeleton represented by general formula (2) and a skeleton represented by general formula (3); and the backing layer is at least one selected from the group consisting of woven or knitted fabrics, non-woven fabrics, and foamed resin sheets. (In formula (1), R1 and R2 are each a C7-11 aliphatic hydrocarbon group and may be the same or different. In addition, (n) and (m) are positive integers, and when R1 and R2 are different from each other, block copolymerization or random copolymerization is carried out.) (In formula (2), R3 and R4 are each a C3-6 aliphatic hydrocarbon group and may be the same or different. In addition, (x) and (y) are positive integers, and when R3 and R4 are different from each other, block copolymerization or random copolymerization is carried out.) (In formula (3), R5 is a C3-5 aliphatic hydrocarbon group and R6 is a C8-12 aliphatic hydrocarbon group. In addition, (a) and (b) are positive integers, and R5 and R6 are each a block copolymer or a random copolymer.)

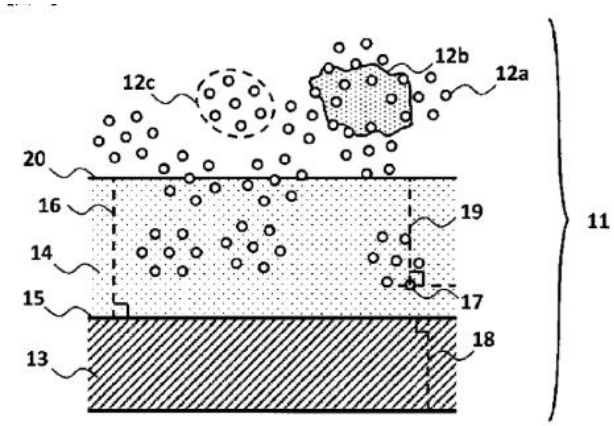

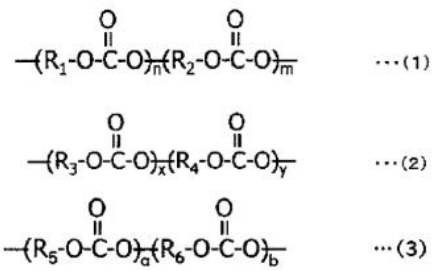

4. FLEXIBLE ABRASIVE PRODUCT

Patent number: WO2025188467A1

Publication date: 2025-09-12

Applicant(s): MILLIKEN & CO [US]

Inventor(s): HUGHES JASON [US]; CLARK LUCAS [US]

Summary

A flexible abrasive product includes a woven textile substrate having a first surface and a second surface, where the woven textile substrate contains a plurality of continuous multi-filament yarns. The flexible abrasive product also includes a first adhesive layer on the first surface of the woven textile substrate and a plurality of abrasive particles both on and at least partially in the first adhesive layer.

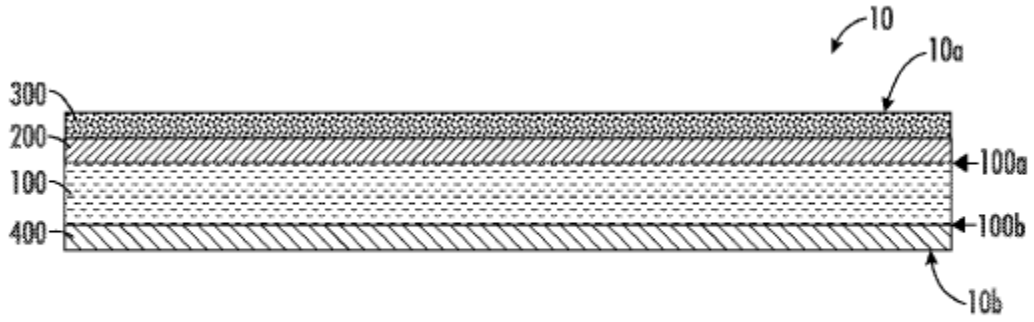

FIG. 1

5. COATING COMPOSITION, A COMPOSITION FOR COATING FURNITURE OR BUILDING INTERIOR, AND AN ARTICLE COMPRISING THE COATING COMPOSITION

Patent number: US20240240031A1

Publication date: 2024-07-18

Applicant(s): NISSIN CHEMICAL IND CO LTD [JP]

Inventor(s): WATANABE KENTARO [JP]

Summary

The purpose of the present invention is to provide a coating composition which gives a substrate excellent feel, abrasion resistance, stain resistance, flame retardancy, and weather resistance; and an article, furniture and a building interior material having a coating formed from the aforesaid coating composition. The present invention provides a coating composition comprising the following components (A) to (D): (A) an emulsion of a silicone acrylic copolymer resin which is a copolymer of 60 to 99 parts by mass of (a1) a polyorganosiloxane represented by the formula (1) and 1 to 40 parts by mass of (a2) an acrylic acid ester monomer and/or a methacrylic acid ester monomer, provided that a total amount of components (a1) and (a2) is 100 parts by mass, the emulsion being in an amount of 0.5 to 20 parts by mass as a solid content, (B) at least one resin emulsion in an amount of 20 to 80 parts by mass as a solid content, selected from the group consisting of acrylic resin emulsions other than component (A), urethane resin emulsions and alkyd resin emulsions, (C) pigment in an amount of 1 to 50 parts by mass, and (D) a flame retardant in an amount of 1 to 10 parts by mass, provided that a total mass of the solid contents of components (A) and (B) and the amounts of components (C) and (D) is 100 parts by mass.

TABLE 1

	Preparation Example				Comparative Preparation Example		
	1	2	3	4	1	2	3
Mass proportion of the raw materials for polyorganosiloxane (a1)							
D4	100	100	50	100	100	100	100
KF-54	0	0	50	0	0	0	0
sodium lauryl sulfate	1	1		1	1	1	1
Pelex SS-L			2				
dodecylbenzene sulfonate	1	1	1	1	1	1	1
γ-methaeryloxypropyl methyldiethoxysilane	0.08	0.1	0.16	0.08	0.08	0.08	8.7
Proportions of a to d in polyorganosiloxane (a1), based on a total 100 of a to d.							
a	99.91	99.93	67.22	99.91	99.91	99.91	93.94
b	0.03	0.03	0.48	0.03	0.03	0.03	6
c	0	0	28.5	0	0	0	0
d	0.06	0.04	3.8	0.06	0.06	0.06	0.06

D4: octamethyl cyclotetrasiloxane

KF-54: diphenyl dimethyl siloxane

Pelex SS-L: 50% sodium alkyl diphenyl ether disulfonate

6. WOVEN FABRIC AND FIBER PRODUCT

Patent number: WO2025220254A1

Publication date: 2024-07-17

Applicant(s): TEIJIN LTD [JP]

Inventor(s): TAMURA ATSUO [JP]

Summary

The present invention addresses the problem of providing a woven fabric and a fiber product which are extremely excellent in heat resistance, flame resistance, stretchability, and dynamic physical properties, and which have favorable appearance quality. The solution is a woven fabric obtained by using a flame-retardant yarn containing flame-retardant fibers and using a composite yarn containing flame-retardant fibers and composite fibers obtained by bonding two components in a side-by-side manner or an eccentric core-sheath manner. The flame-retardant yarn is disposed on either one of the warp and the weft of the woven fabric, and a yarn A comprising the composite yarn and a yarn B comprising the flame-retardant yarn are arranged on the other of the warp and the weft. In the yarn A, the weight ratio of the composite fibers is 20-60 wt% of the yarn weight, and the yarn B is a twisted yarn in which two or more of the flame-retardant yarns are twisted together and the twist coefficient is 440 or less. In the woven fabric, the basis weight is 190 g/m2 or more. The woven fabric has an elongation percentage of 14% or more and a tensile strength of 300N or more in at least one of a warp direction and a weft direction, and the woven fabric satisfies flame retardancy as defined by ISO 15025-B.

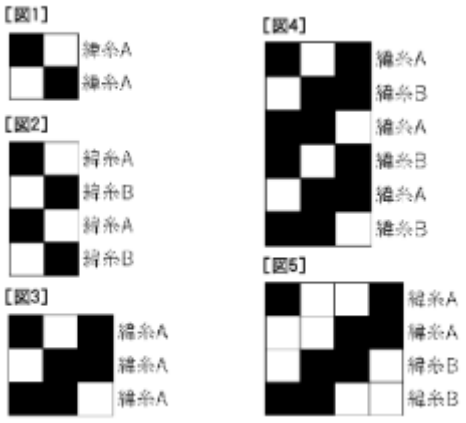

7. TEXTILE SUBSTRATE WITH STRUCTURALLY INTEGRATED, DESTRUCTIBLE THREADS TO FACILITATE MATERIAL SEPARATION

Patent number: WO2025171910A1

Publication date: 2025-08-21

Applicant(s): CLIMATEX AG [CH]

Inventor(s): BAUMELER ALFRED [CH]; COSATTO MAURIZIO [CH]

Summary

The newly developed textile substrate (1) consists of three material groups and is produced by means of a weft and/or warp knitting technique. First threads (2) consist of one or more first (e.g. skin-friendly) materials (20) of a first material group, second threads (3) consist of one or more second (e.g. robust) materials (30) of a second material group, and third threads (4) consist of a destructible material (40) of a third material group, which forms a "textile screw". This unique composition enables efficient and environmentally friendly separation of the first materials (20) of the first material group from the second materials (30) of the second material group at the end of the service life of the textile substrate (1), making recycling easier. Areas of application of this innovation are, inter alia, clothing, interior fittings and technical textiles which make a contribution, by way of recycling, to environmental protection and to meeting standards such as the EU's Green Deal.

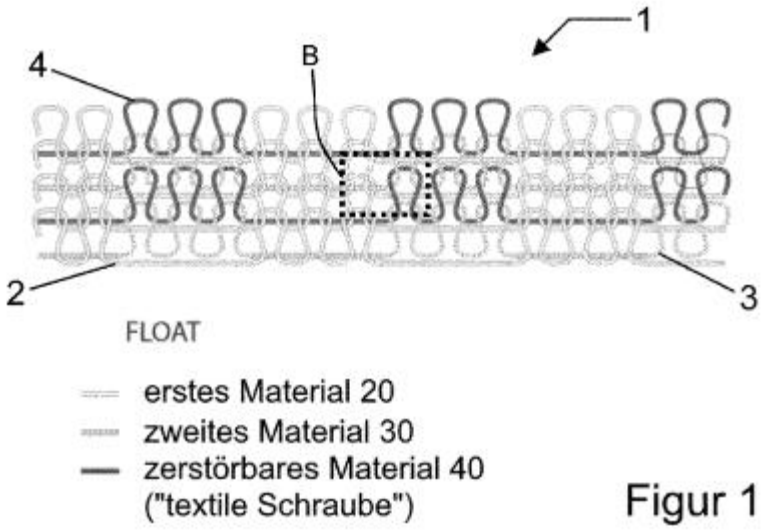

Figur 1

8. BREATHABLE MULTI-LAYER COMPOSITE

Patent number: WO2025256883A1

Publication date: 2025-12-18

Applicant(s): BENECKE KALIKO AG [DE]

Inventor(s): NEUMANN THORSTEN [DE]; HECKEL ANDREAS [DE]; WITTMANN GABRIELE [DE]

Summary

The invention relates to a sustainable and breathable multi-layer composite, in particular artificial leather, comprising at least one textile substrate and a functional layer, wherein the multi-layer composite has an air permeability of 0.1-200 ldm-2min-1, determined according to DIN EN ISO 9237-1995, and a water vapor permeability of 0.1-200 mgcm-2h-1, determined according to DIN EN ISO 14268.2-2013 method C, and wherein the breathable multi-layer composite is made of at least 60 wt.% bio-based and/or recycled raw materials, based on the total weight of the multi-layer composite.

Tabelle 2: Messung ausgewählter Kennwerte

	Durchführung nach Norm:	Exp1	Exp2	V1
Anteil Olivenkernmehl (in Streichmasse) in Gew.%		0	5	0
Anteil Kaffee (in Streichmasse) in Gew.%		5	0	0
Anteil natürlichen und nachwachsenden Rohstoffen in Gew.%		65%	94%	33%
Luftdurchlässigkeit	ISO9237	10	10	10
Wasserdampfdurchlässigkeit Vorderseite (ohne Vorbehandlung)	DIN EN ISO 14268	5	5	5
Gasflamme	BS5852 IS-1	Bestanden	Bestanden	bestanden
MVSS	DIN75200/ISO3795 MVSS302	Bestanden	nicht geprüft	bestanden
Dicke in mm	DIN/EN/ISO 2286-3 (30mm; 4,5 kpa)	1.4	1.4	1.4
Gewicht in g/m²	DIN/EN/ISO 2286-2	690	680	720
Höchstzugkraft (Fmax) Längs	DIN EN ISO 1421 / 2 N Vorkraft	450	450	500
Höchstzugkraftdehnung Längs	DIN EN ISO 1421 / 2 N Vorkraf	45	45	70
Weiterreißfestigkeit Längs	DIN EN ISO 4674-1 B	25	25	30
Dauerfaltverhalten, 23°C/ Touren Längs	DIN EN ISO 32100	100,000	50,000	100,000
Geruch Note (Mittelwert, gerundet)	in Anlehnung RAL-GZ 430	3	nicht geprüft	3
Martindaleabrieb	DIN EN ISO 5470-2	100.000 invers	100.000 invers	100.000 invers
Lichtechtheit	DIN/EN/ISO 105-B02	Stufe 6	Stufe 6	Stufe 6
Reibechtheit Nass	DIN/EN/ISO105-X12 / GS94011	GM 4,5	GM 4	GM 4,5