Patent alert 2020-06

Product conformity

Method of manufacturing a part made from composite material with control of conformity

Patent no: FR3087194

Publication date: 2020-04-16

Applicant(s): Safran

Inventor(s): LIAIS LUDOVIC PHILIPPE, DROZ NICOLAS, PODGORSKI MICHAEL

A method for manufacturing a part made of composite material comprises injecting a slip (150) containing a powder of refractory ceramic particles (1500) into a fibrous texture, draining the liquid (1501) from the slip (150) which has passed through the fibrous texture and retaining the powder of refractory ceramic particles inside the texture so as to obtain a fibrous preform (15) loaded with refractory ceramic particles (1500), and removing the fibrous preform (15) from the mould. The method comprises, after the step of removing the fibrous preform (15) from the mould, a step of checking the compliance of the fibrous preform that has been removed. If the preform is non-compliant, the method further comprises, before a sintering step, immersing the fibrous preform (15) removed from the mould in a bath of a liquid capable of decompacting the refractory ceramic particles present in the fibrous preform, and further injecting a slip containing a powder of refractory ceramic particles into the fibre preform present in the mould cavity.

(From WO2020074813 A1)

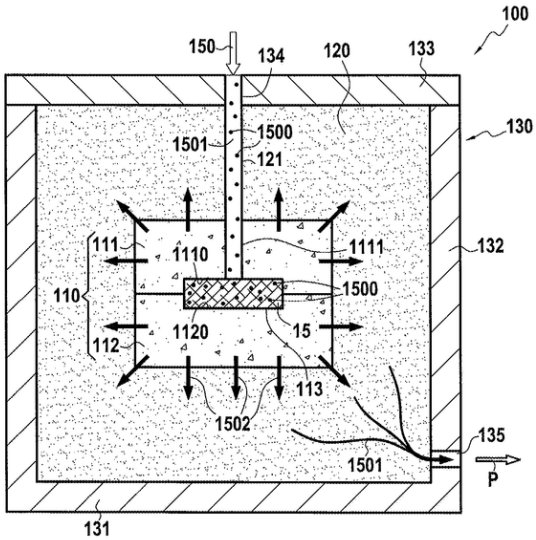

Electrostatic liquid sprayer usage tracking and certification status control system

Patent no: US10434525

Publication date: 2019-10-08

Applicant(s): ES Product developement

Inventor(s): COOPER STEVEN C

An electrostatic sprayer system for spraying a liquid includes a control system that provides user certification status control and usage reporting for the electrostatic sprayer system, including authorizing the user in conformity with the user's certification status and tracking the user, material(s), locations, duration of operation and amount of material being sprayed. The sprayer system includes a sprayer head having an outlet for dispensing a liquid that has been atomized and electrically charged via an electrode of the sprayer system, a vessel containing the liquid prior to dispensing, a power supply for providing a voltage and current to the electrode, a flow controller for controlling flow of liquid emitted from an outlet of the sprayer head, and a control system for controlling the flow controller in conformity with a certification status of a user of the sprayer system and reporting usage of the sprayer system to a database.

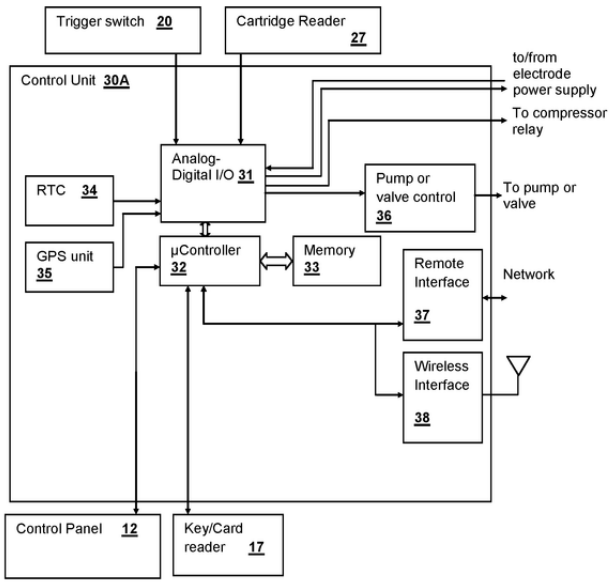

Machine and method to control textile quality

Patent no: WO2020/079493

Publication date: 2020-04-23

Applicant(s): SMARTEX UNIPESSOAL

Inventor(s): MARTINS LOUREIRO GILBERTO, MENDES DA ROCHA ANTÓNIO JORGE

Machine and method for controlling textile fabric defects during the textile production and method for retrofitting a circular knitting machine having a fixed support structure, a rotational support structure, said system comprising: a digital camera for capturing digital images of the knitted textile fabric, a data processor for processing the captured digital images, a camera support structure for holding the camera, a lighting system to illuminate the knitted textile fabric from the camera side for capture by the digital camera; wherein the camera and back support structures are fixed to the rotational structure.

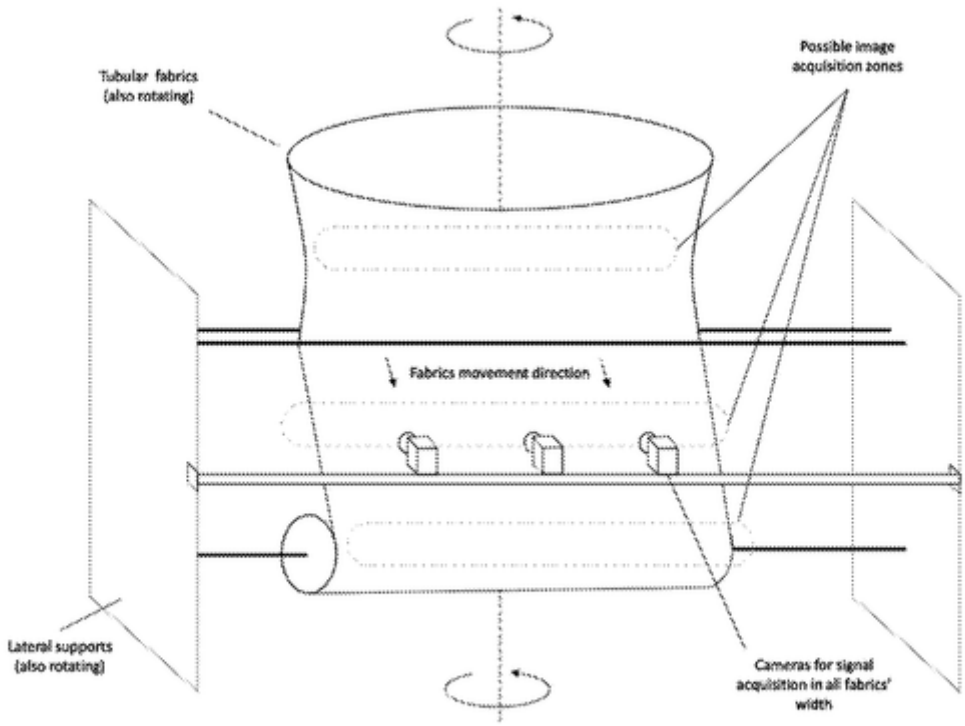

Fig. 1

Textile brightness measurement system

Patent no: WO2019/210436

Publication date: 2019-11-07

Applicant(s): USTER TECHNOLOGIES

Inventor(s): DEHKORDI PEYMAN H, RINEHART KENT A, MCALISTER DAVID DICKSON III

An apparatus (100) for measuring not only the reflected radiation but also the fluorescence emission of a textile sample (106), which includes a presentation subsystem (102) having a viewing window (108). A radiation subsystem (114) has a tunable radiation source (120) for directing radiation (122) having a wavelength range and an intensity through the viewing window (108) toward the sample (106), and thereby causing the sample (106) to produce a fluorescence (124). A sensing subsystem (126) has an imager (130) for capturing the reflected radiation and fluorescence (124) in an array of pixels.

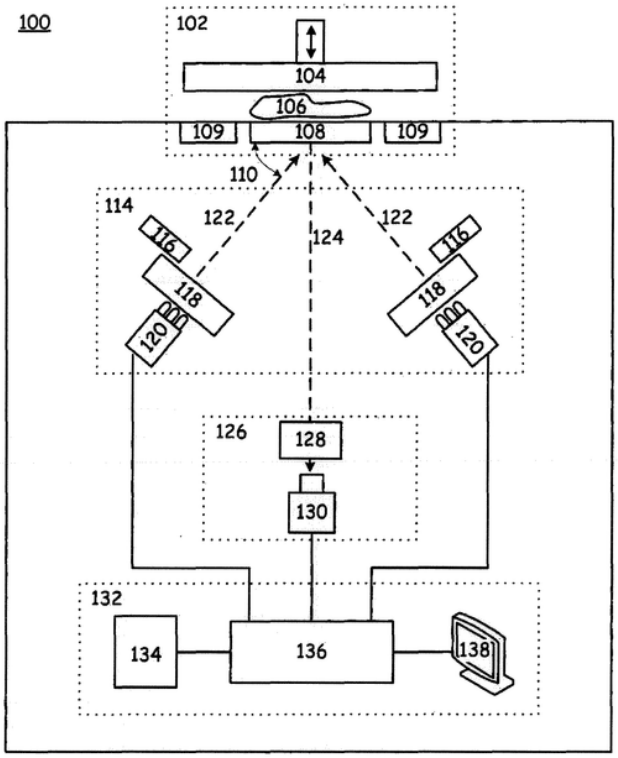

Fig. 1

Quality test system for textile printing

Patent no: TWM577429

Publication date: 2019-05-01

Applicant(s): CHANG, FU-LING

Inventor(s): CHANG, FU-LING

Provided is a test system for textile printing including a textile and a pattern layer having a textile test guide table, wherein the textile test guide table has patterns and a color information. The pattern layer having the textile test guide table is located on the textile to be a layered structure, wherein the layered structure is used to evaluate an output quality of a printing pattern of the pattern layer on the textile.

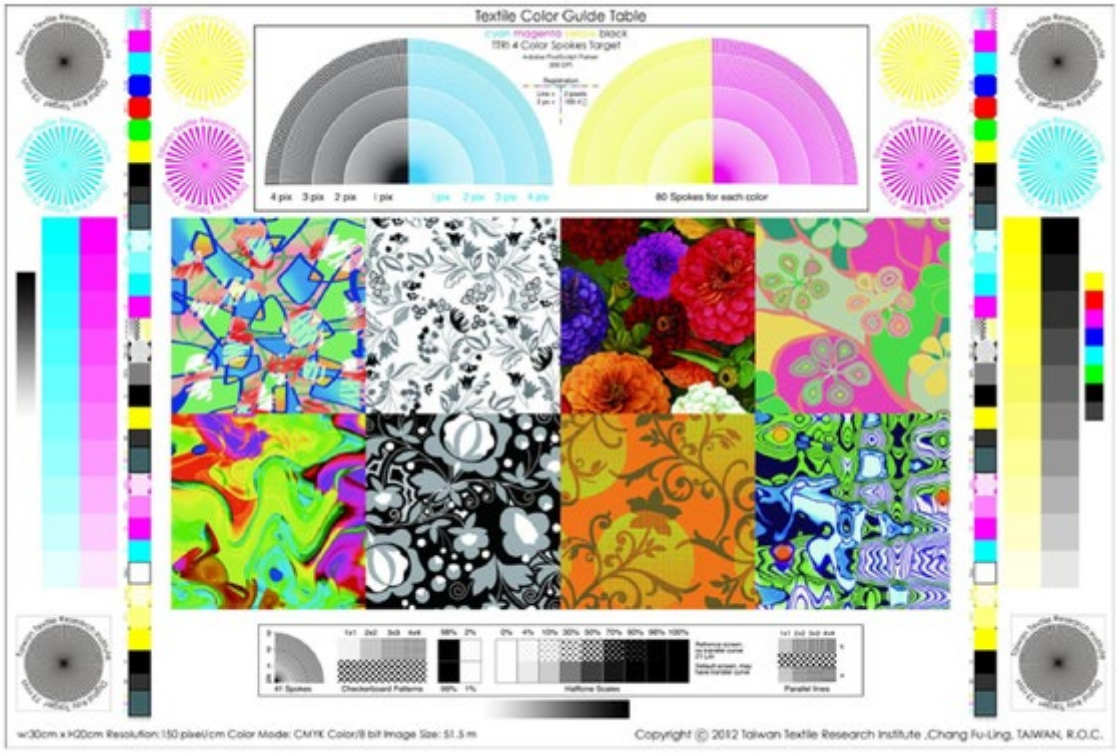

【圖1】

Devices and methods for yarn quality monitoring

Patent no: WO2019/130209

Publication date: 2019-07-04

Applicant(s): PERNER PETR, SUSKA JOSEF, ZELINKA ONDREJ

Inventor(s): PERNER PETR, SUSKA JOSEF, ZELINKA ONDREJ

Disclosed are methods of monitoring textile yarn quality and apparatuses for monitoring textile yarn quality. Moving textile yarn 1 is monitored for its quality to meet required criteria, e.g. evenness or presence of unwanted foreign fibers. Light illuminating by light sources 2 and/or 7 and an image sensor 3 are used. The yarn 1 is placed as an obstacle into the pathway 100 of one diffused 5 light 2, contours of the light being focused 6 for a sharp yarn contours image capture. The light 7 is reflected from the yarn 1 and propagates along a path 100 to the image sensor through diffraction element 8. Portion of reflected light is diffracted 8 and creates interference pattern. Remaining reflected light creates yarn image. Thus light 2 directly illuminates image sensor. Light 7 illuminates moving yarn 1 and light from light source 7 is reflected from the yarn and illuminates image sensor. The yarn diameter is determined by processing of the yarn contours image or yarn image. The color analysis of the yarn 1 is determined by processing of captured interference patterns. Further evaluation of yarn diameters is used for yarn evenness monitoring and further color analysis results evaluation is used for foreign fibers monitoring.

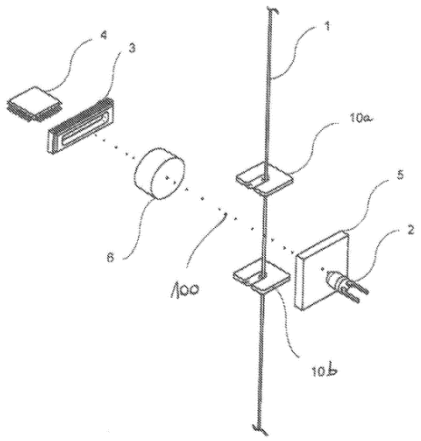

FIG. 1

Color quality assessment based on multispectral imaging

Patent no: US20190180432

Publication date: 2019-06-13

Applicant(s): HONG KONG RESEARCH INSTITUTE OF TEXTILES & APPAREL

Inventor(s): XIN JOHN HAOZHONG, SHEN HUI-LIANG, GE QUAN-GENG

The present disclosure provides a method and a computer-readable storage medium for color quality assessment of a batch-sample image based on multispectral imaging. The method comprises: selecting an operation area on a reference image and locating a corresponding operation area on a batch-sample image, wherein the reference image is used for color comparison with the batch-sample image to determine whether the batch-sample image satisfies a pass requirement; generating and comparing the color-information items obtained from the reference image and from the batch-sample image respectively and determine whether the batch-sample image satisfies the pass requirement based on one or more thresholds. This method can be applied to automatically and precisely assess the quality of mixed-color fabrics in textile industry, which is more objective, reliable, and cost-effective, as compared to conventional methods for color quality assessment.

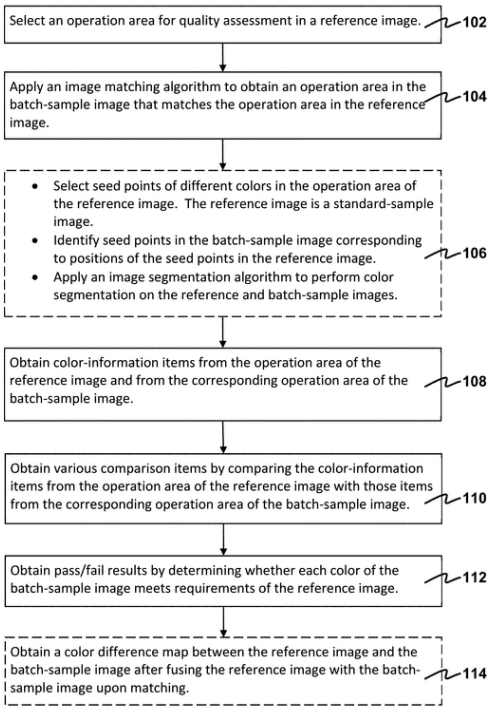

Iot based water quality monitoring for textile industry

Patent no: IN202041012885

Publication date: 2020-05-08

Applicant(s): Priya V, Sudhakar S, Sharavanan S, Priya Vishnu A, Karpagavalli C, Suresh M B, Vidhya K, Dadheech Pankaj, Purohit Gourav, Sharma Sachin, Kiruthiga K, Abinaya S, Athithi S

Inventor(s): Priya V, Sudhakar S, Sharavanan S, Priya Vishnu A, Karpagavalli C, Suresh M B, Vidhya K, Dadheech Pankaj, Purohit Gourav, Sharma Sachin, Kiruthiga K, Abinaya S, Athithi S

The Internet of Things (IoT) is an ecosystem in which objects, entities, or people have unique identities and the capacity to transmit data across a network without needing human-to-human or computer-to-computer contact. The IoT enables artifacts to be detected and remotely operated through current network networks, providing incentives for more effective incorporation of the real environment with computer-based structures, resulting in more exceptional performance, precision, and economic gain. IoT board with SIM900 GPRS modem to enable internet link also fitted with a controller to handle all GPRS-based online data from UART inputs. Data can be linked on a particular platform or social network from which the consumer may access the data.

Figure 9: Pin diagram of Character LCD type HD44780